**SAMSUNG**

# BOTTLE HOLDER WIHT SIDE TELESCOPIC RAIL MOUNTING INSTRUCTIONS

CODE
H 3900-1 N

① 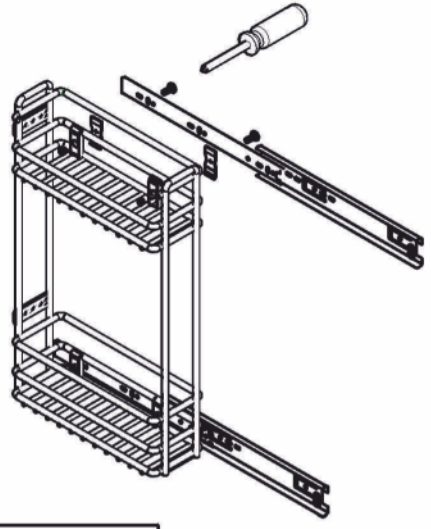

M4X10 RYSB /4
M4 Flanged nut/4

② m4 x 11 RYSB /2

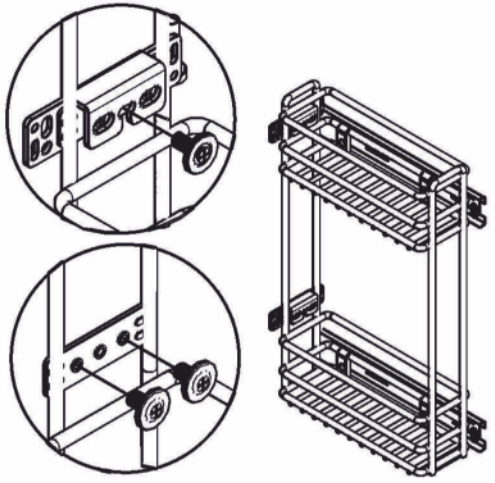

m4 x 8 RYSB /4

③ 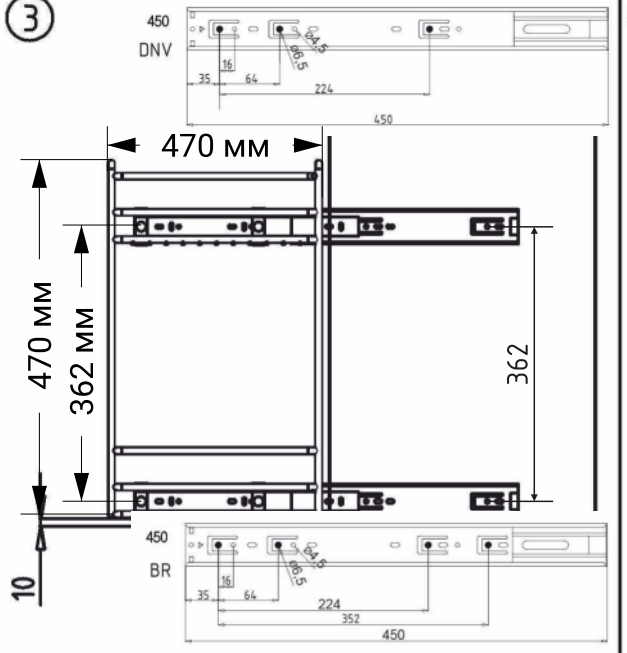


④ 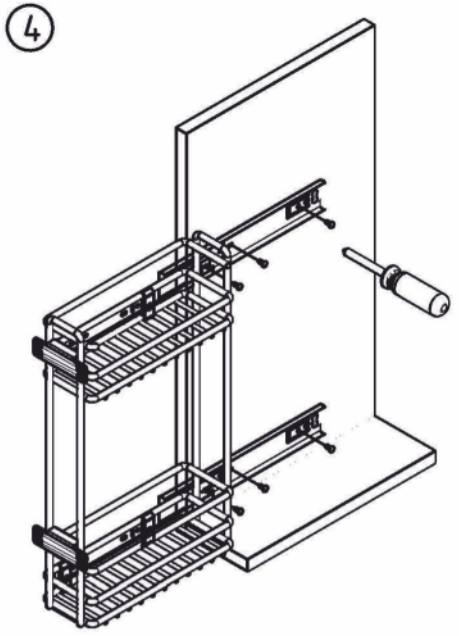

⑤ 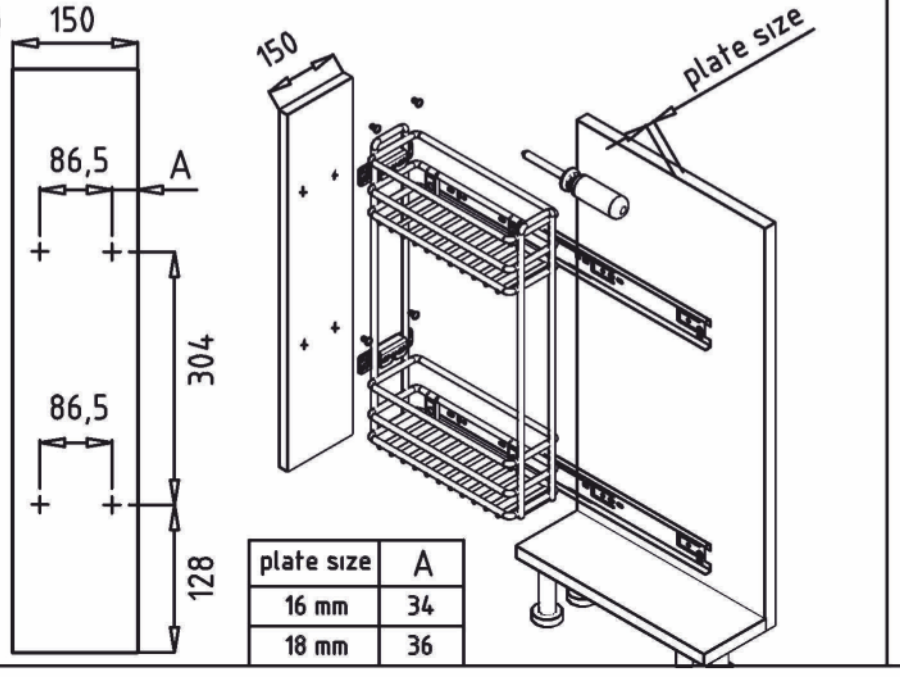


| plate size | A |
|---|---|
| 16 mm | 34 |
| 18 mm | 36 |

⑥ 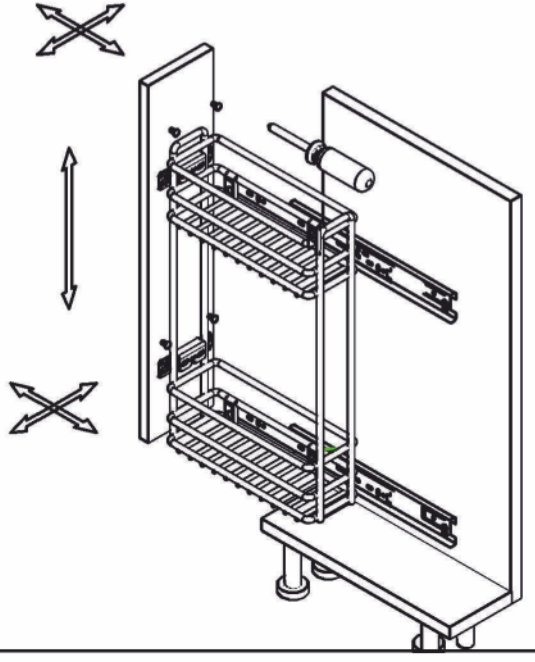

⑦ 